96W Constant Voltage
0-10V PWM Dimmable LED Driver Class 2
ITEM NUMBER 5020-PSU-96W24V-0-10VDIM

Prism Lighting Group

FEATURES

- Output: 24Vdc Constant Voltage
- Input voltage range 100-277VAC
- Built-in PFC function / PF>0.90
- Efficiency >88%
- Protections for short circuit, over voltage& overheat
- IP20 design for indoor or outdoor installations
- Cooling by free air convection
- Suitable for LED lighting & moving sign applications
- Suitable for dry/damp locations
- Compliance to worldwide safety regulations
- UL/cUL, FCC listed, Class P, Type HL
- 7 years warranty

c UL us LISTED

CE IP20

SPECIFICATIONS

PRODUCT NUMBER	5020-PSU-96W24V-0-10VDIM-JB-CL2
DC Voltage	24V
Voltage Accuracy	± 0.5V
Rated current	4.00A (Class 2 type)
Rated Power	96W
Voltage Range	100-277V AC
Frequency Range	47~63HZ
Power Factor (Typ.)	PF≥0.98/110V , PF≥0.95/277V
Full Load Efficiency (Typ.)	>88%
AC Current (Typ.)	1.3A @110VAC
THD(Typ.) at full load	<15% @120V <20%@230V <20% @277V
Leakage Current	<0.5mA
Short Circuit	Hiccup mode, recovers automatically after fault condition is removed
Over Voltage	≤140VAC(90~135V) , ≤270VAC(170~265V)
Over Temperature	100°C±10°C shut down o/p voltage, automatically recover after cooling
Over Loading	≤120% constant current limiting, auto-recovery
Working Temperature	-40 ~ +60°C
Working Humidity	20~90%RH, non-condensing
Storage Temp & Humidity	-40 ~ +80°C 10 ~ 95%RH
TEMP. Coefficient	±0.03%/°C (0 ~ 50°C)
Vibration	10~ 500Hz, 2G 10min./1 cycle, period for 60min., each along X,Y,Z axis
Safety standards	UL8750+UL1310
Withstand Voltage	I/P-O/P:3.75KVAC
Isolation resistance	I/P-O/P: 100MΩ/500VDC/25°C/70%RH
EMC EMISSION	FCC Part 15 B
Warranty	7 Years
Weight	1.3Kg
Dimensions	221x93x40mm (LxWxH)

96W Constant Voltage
0-10V PWM Dimmable LED Driver Class 2
ITEM NUMBER 5020-PSU-96W24V-0-10VDIM

NOTES

1. All parameters NOT specially mentioned are measured at 110VAC/277VAC input , rated load and 25°C of ambient temperature
2. Ripple& noise are measured at 20MHz of bandwidth by using a 12"twisted pair-wire terminated with a 0.1uf &47uf parallel capacitor
3. Tolerance: includes set us tolerance, line regulation and load regulation.

MECHANICAL SPECIFICATIONS

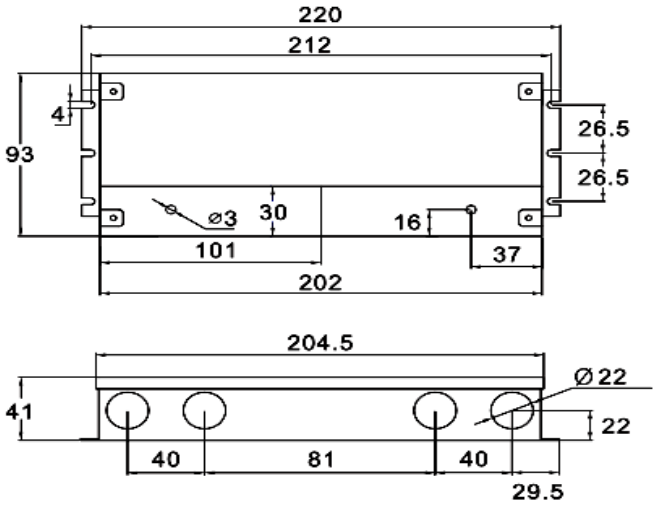

- Input (L) and (N) with wires to be connected to AC
- Output LED SEC: Red wire to LED Positive side (+) , Black Wire to LED Negative side (-).
- Output 18AWG*2C, Brown is output (V+),Blue is output (V-)

DIMMING OPERATION

- Built-in 3 in 1 dimming function, I67 rated .Output constant current level can be adjusted through output cable by connection a resistance or 1-10V DC or 10V PWM signal between DIM+ and DIM-
- Reference resistance value for output current adjustment (Typical)

Resistance value	Signal driver	0Ω	10KΩ	20KΩ	30KΩ	40KΩ	50KΩ	60KΩ	70KΩ	80KΩ	90KΩ	100KΩ	OPEN
	Multiple drivers	0Ω/N	10KΩ/N	20KΩ/N	30KΩ/N	40KΩ/N	50KΩ/N	60KΩ/N	70KΩ/N	80KΩ/N	90KΩ/N	100KΩ/N	——
Percentage of rated current		0%	10%	20%	30%	40%	50%	60%	70%	80%	90%	100%	102%-108%

➢ 1-10/0-10V dimmable function for output current adjustment(Typical)

Dimming value	0V	1V	2V	3V	4V	5V	6V	7V	8V	9V	10V	OPEN
Percentage of rated current	0%	10%	20%	30%	40%	50%	60%	70%	80%	90%	100%	102%-108%

➢ 10V PWM signal for output current adjustment (Typical): Frequency range:100Hz-3KHZ

Duty value	0%	10%	20%	30%	40%	50%	60%	70%	80%	90%	100%	OPEN
Percentage of rated current	0%	10%	20%	30%	40%	50%	60%	70%	80%	90%	100%	102%-108%

96W Constant Voltage
0-10V PWM Dimmable LED Driver Class 2
ITEM NUMBER 5020-PSU-96W24V-0-10VDIM

Prism Lighting Group

LED DRIVER CONNECTING SOLUTIONS

DIAGRAM 1

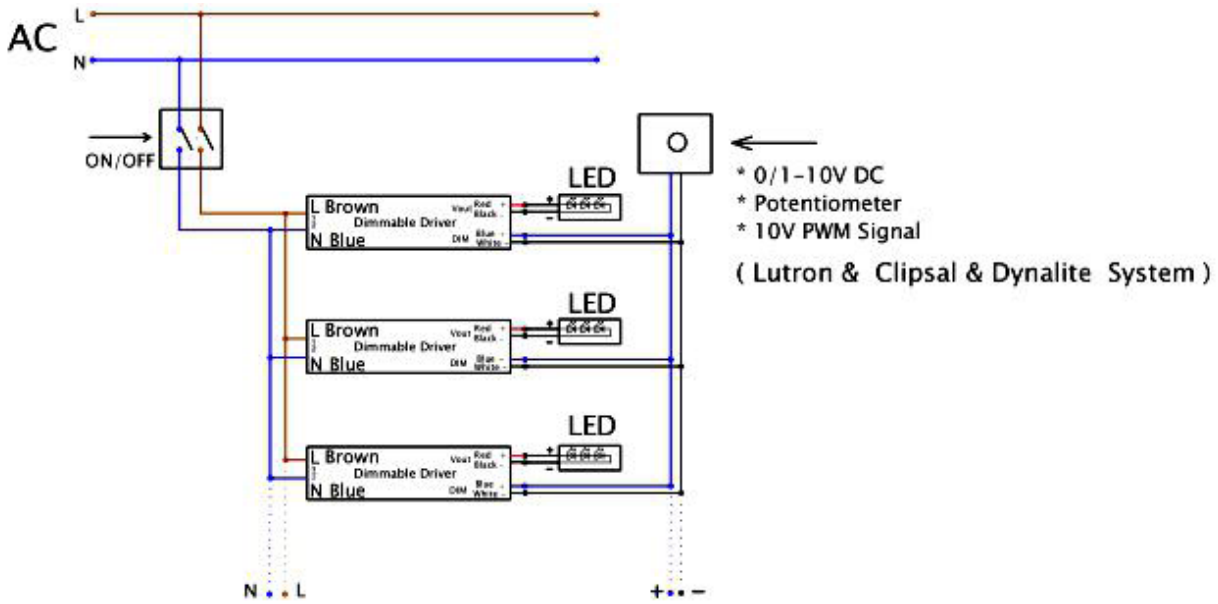

DIAGRAM2

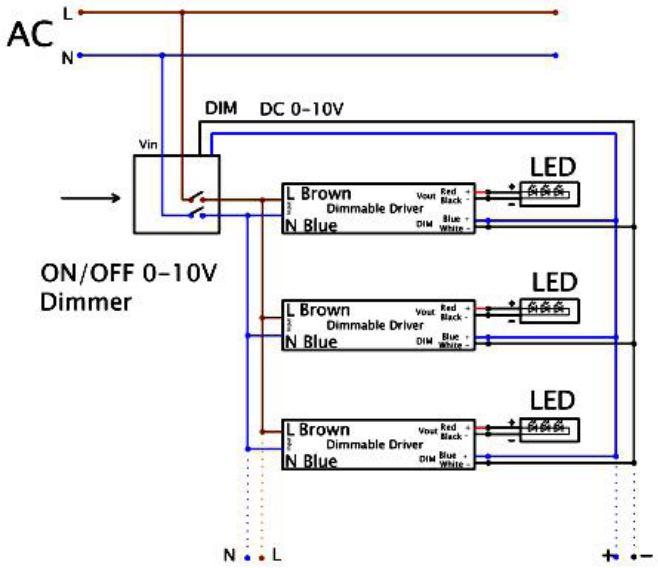

96W Constant Voltage
0-10V PWM Dimmable LED Driver Class 2
ITEM NUMBER 5020-PSU-96W24V-0-10VDIM

DERATING CURVE

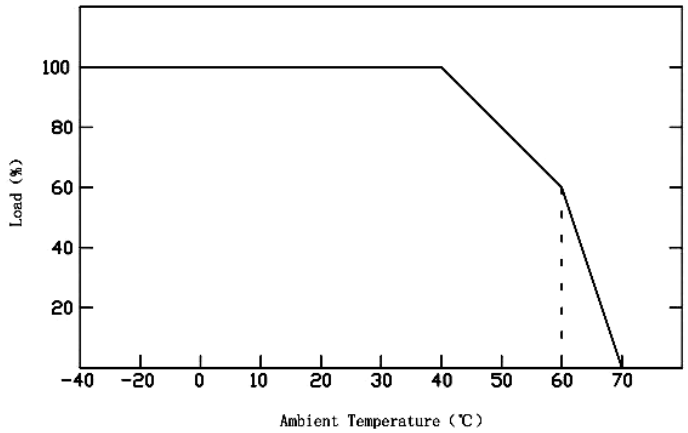

- Load carried in accordance with the load derating curve, according to the ambient temperature derating, in order to extend the running life.

INSTRUCTIONS

- This driver should be installed by qualified and professional person;
- Please make sure the driver is installed with adequate ventilation around it to allow for heat dissipation.
- Ensure that wiring is correct before test in order to avoid light and power supply damage;
- If the LED driver does not work properly, contact us by email at info@prismlightinggroup.com, by phone 1-866-620-1380 to get technical support or visit our offcial Website: www.PrismLightingGroup.com