Lovo™ RC6

LED Recessed Light Kit

PLG-RC6-15W-24V

PACKAGE CONTENTS

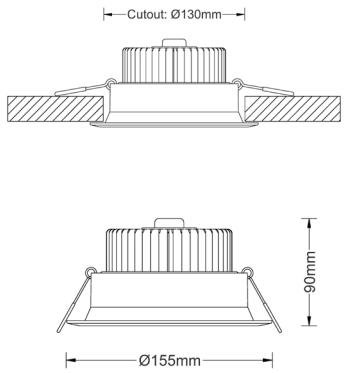

FEATURES

- LINKABLE MAX· 6PCS
- SAFE VOLTAGE
- PWM DIMMABLE
- ENERGY EFFICIENT
- INDOOR
- PATENT PENDING
- 5 YEAR WARRANTY
- IP21 RATED
- SMART COMPATIBLE
- 5FT FC CABLE EXTENSION

SPECIFICATIONS

ITEM NUMBER	
#3155-RC6-15W-24V-3K	#3155-RC6-15W-24V-5K
LIGHT SOURCE	**INPUT VOLTAGE**
Sharp LED	24Vdc
COLOR TEMPERATURE	
Warm White 3000K; Natural White 5000K	
POWER CONSUMPTION	**IP GRADE**
15 Watt	IP21
LUMEN OUTPUT	**ENVIRONMENT**
1200lm (80lm/W)	Indoor Use
LENS ANGLE	**CRI**
38°	CRI 80
OPERATION TEMPERATURE	**MATERIAL**
Max TA = 45°C	Pure Aluminum
SURFACE FINISH	**ADJUSTMENT**
White	Gimbal 25°
DIMMING	**CONNECTION**
PWM Dimmable	Lovo™ FC In/Out System
CUTOUT	**DIMENSIONS**
5.125" (130mm)	6.2"Dx3.5"H (155x90mm)

INSTALLATION REQUIREMENTS

- Before installation, check that the 24Vdc power is off. Unplug power supply or unplug FC power cable.
- The LED driver is rated IP20 and the LED recessed light is rated IP21. This must be maintained during installation.
- Insulation can be abutted to the LED recessed light module, but DO NOT fully cover the LED recessed light with insulation. (See clearance information).
- If loose fill insulation is used, a barrier is required between the LED light and loose fill insulation when abutted against the LED light. We recommend a vapor barrier boot installed prior to installation for insulated ceiling application. This will create a proper seal so no cold or hot air enters living space from attic.
- LED Power Supply must be mounted in an accessible location, e.g. by electrical panel, in a closet, above a kitchen cabinet, etc.
- The LED recessed light and LED driver are not suitable for 120V dimmer switch. Dimming is done on the 24V output side of the power supply, not on the 120V input side.
- Take care not to pull any electrical wires during unpacking as this may damage the connection.
- Lay out all the components on a smooth surface and make sure there are no components missing before assembly.
- Check whether the fitting has been damaged during transport. Do not operate/install any product which appears damaged in any way. Return the complete product to the place of purchase for inspection, repair or replacement.
- Layout your recessed locations first followed by your power supply location and then your switch location (if applicable)
- All wiring and installation of the light fitting must adhere to local and national wiring rules.

WARRANTY

Thank you for purchasing this quality Prism Lighting Group product. To ensure correct function and safety, **please read and follow all Instructions carefully** before using the product. Please keep instructions for future reference.

SAFETY TIPS

- Do not connect LED recessed light to any voltage other than 24VDC, failure to do so may cause permanent damage to the recessed light.
- Do not plug the driver to AC outlet before the LED recessed light is properly connected, it may damage the function of the LED light.
- When dimming, only compatible with 24Vdc dimmer switches or controllers with PWM (Pulse Width Modulation).
- Locate the driver in a well ventilated and accessible area as well as free from any insulating material.
- Do not install or operate LED recessed light kit into a completely sealed environment or in an environment that has humidity levels above 70%.
- Always ensure the power is OFF and the fitting has cooled down before performing any maintenance, cleaning, changing the globe or adjustment to the fitting.
- To avoid injury or damage to the fitting, ensure that FC Connectors are secure before connecting the power.
- Handle the fitting and cover/shade with care to avoid breakage.
- Find a suitable location away from liquids and hazards.
- Ensure that the fitting does not come in contact with corrosive chemicals, etc.
- To clean, wipe with a damp clean cloth. Never soak the fitting with water.

Prism Lighting Group

Lovo™ RC6

LED Recessed Light Kit

PLG-RC6-15W-24V

INSTALLATION DIRECTIONS

1. Cut the installation hole of 5.125” (130mm) into the ceiling (Figure 1). For open joist (new construction) scenario, mount optional New Construction Rough-In-Plate.
2. Run your Lovo™ FC cabling from power supply to optional PWM dimming control then to the lights. (Figure 2).
3. When you are ready to connect the light, line up the arrows embossed into each FC connector and connect the input plug to the socket outlet. Push together until the green end of the input plug is no longer visible within the output plug. (Figure 3)
4. Place the LED recessed light into the ceiling by pushing up on the spring flanges on the side of the light (beware of the force of the tension spring). Push the flanges into the hole provided and slowly work the light up until the trim ring covers the opening. (see Figure 4, 5 and Clearance Information section).

FIG. 1

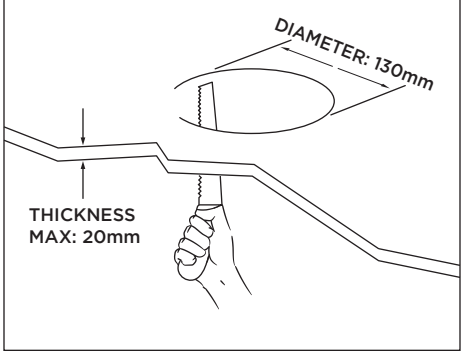

FIG. 2

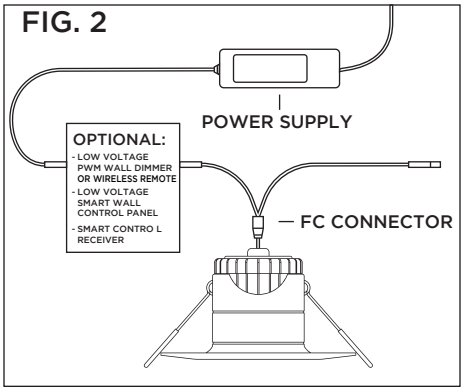

FIG. 3

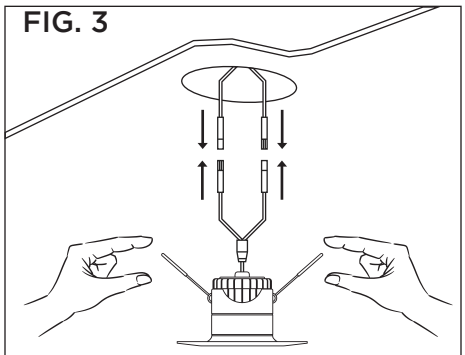

*BEFORE CONNECTING INPUT (MALE) AND OUTPUT (FEMALE), LINE UP THE ARROWS FOR PROPER ALIGNMENT THEN INSERT.

FIG. 4

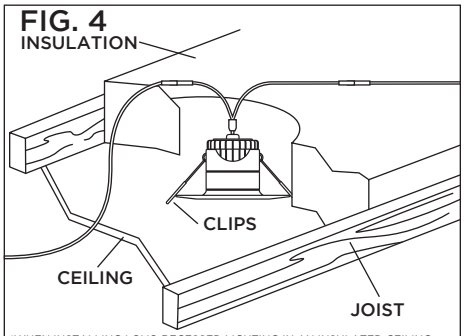

*WHEN INSTALLING LOVO RECESSED LIGHTING IN AN INSULATED CEILING WE RECOMMEND A VAPOR BARRIER BOOT OR RECESSED LIGHT INSULATION BOX ENCLOSURE. NON-INSULATED CEILINGS DO NOT REQUIRE ANY VAPOR BARRIER PROTECTION.

FIG. 5

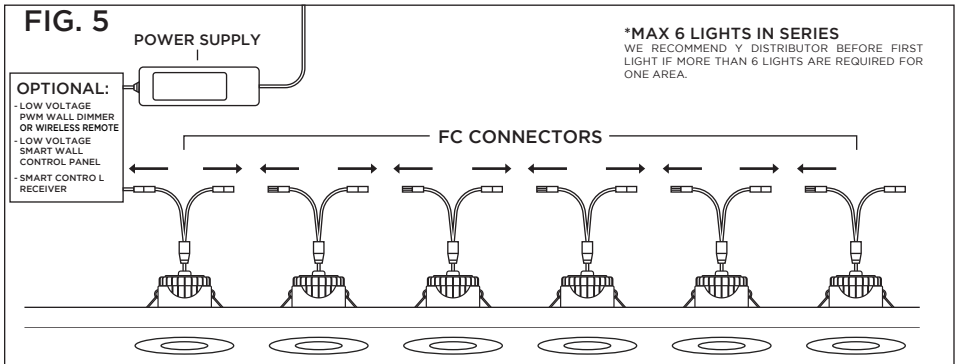

*MAX 6 LIGHTS IN SERIES
WE RECOMMEND Y DISTRIBUTOR BEFORE FIRST LIGHT IF MORE THAN 6 LIGHTS ARE REQUIRED FOR ONE AREA.

*BEFORE CONNECTING INPUT (MALE) AND OUTPUT (FEMALE), LINE UP THE ARROWS FOR PROPER ALIGNMENT THEN INSERT.

CLEARANCE INFORMATION

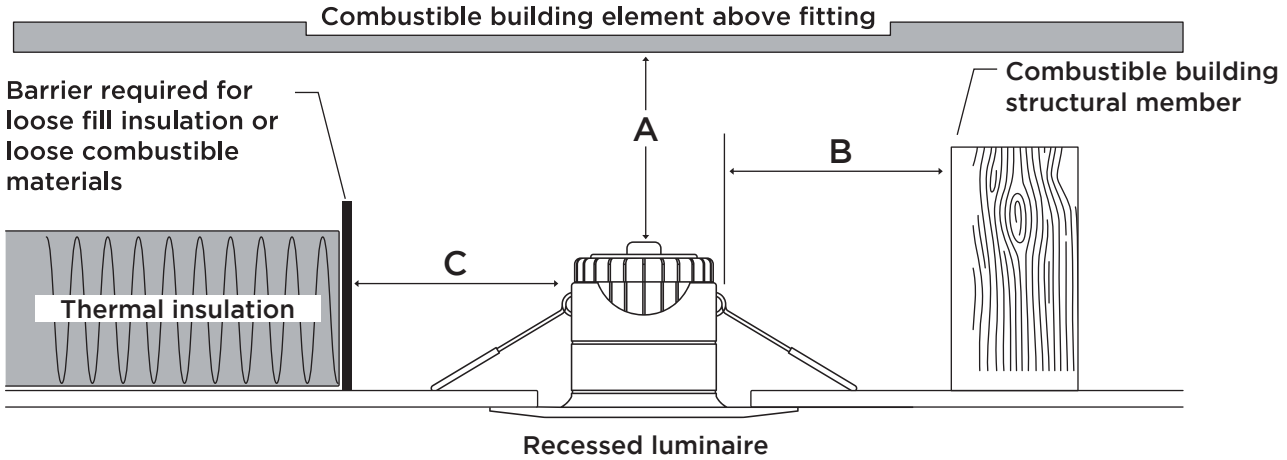

LOCATION	DISTANCE	DESCRIPTION
A	2” (50 MM) MINIMUM	CLEARANCE BETWEEN THE TOP OF RECESSED LUMINAIRE AND COMBUSTIBLE MATERIALS
B	2” (50 MM) MINIMUM	CLEARANCE BETWEEN STRUCTURAL MEMBER
C	0 MM (ABUTTED)	INSULATION CAN BE ABUTTED AGAINST THE RECESSED LUMINAIRE